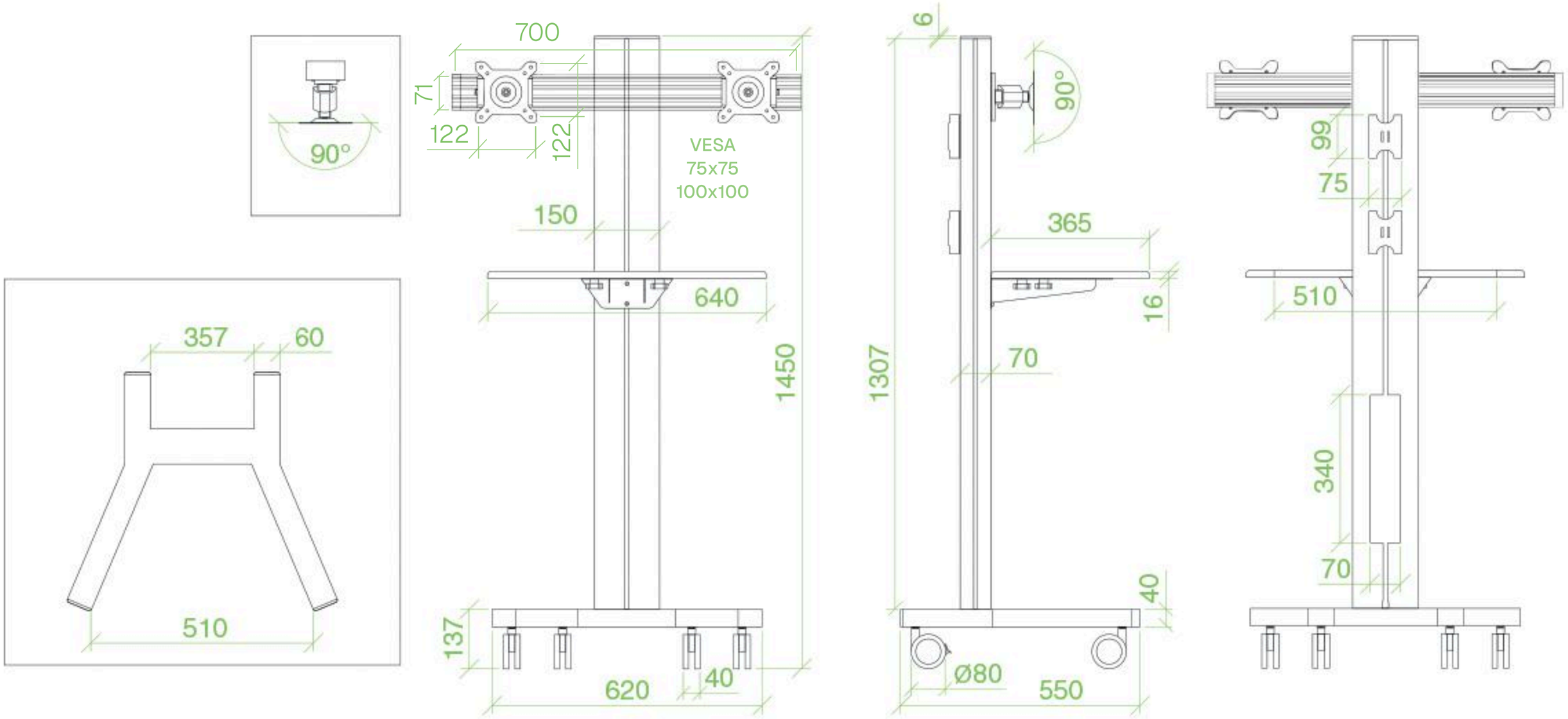KFT 1201/2 Silver