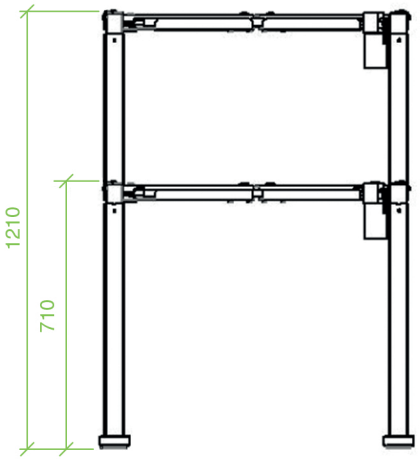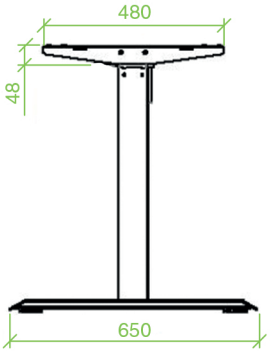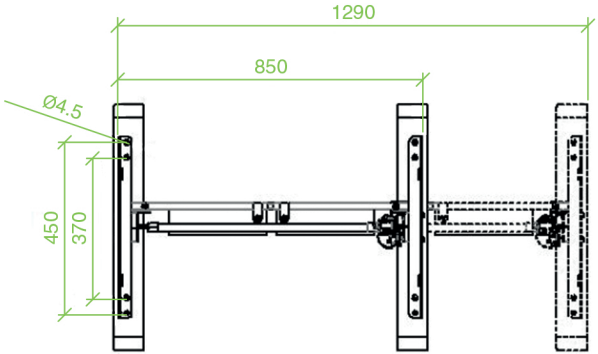BSSD-L10-1812